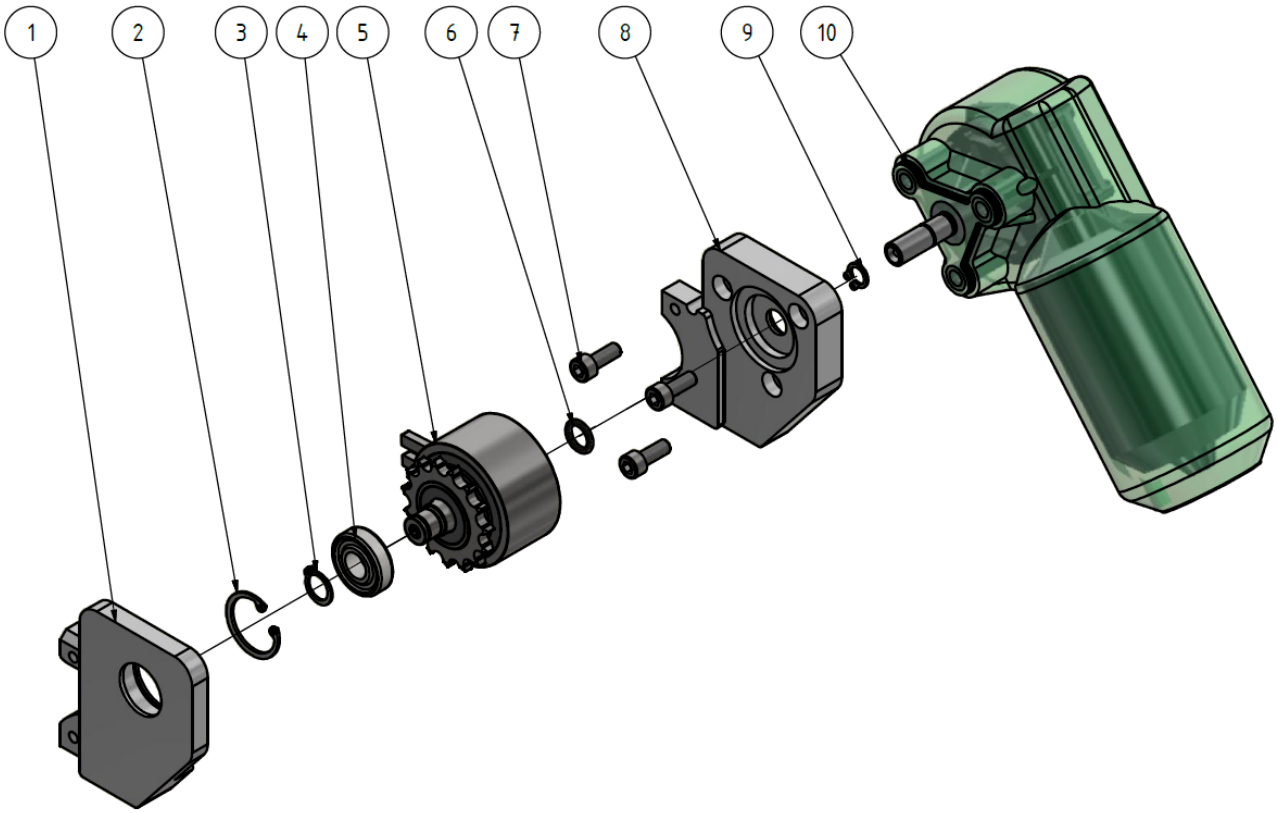

From:
https://wiki.envirologic.se/ - **Envirologic Support Wiki**

Permanent link:
https://wiki.envirologic.se/doku.php/drive?rev=1572871487

Last update: **2019/11/04 04:44**