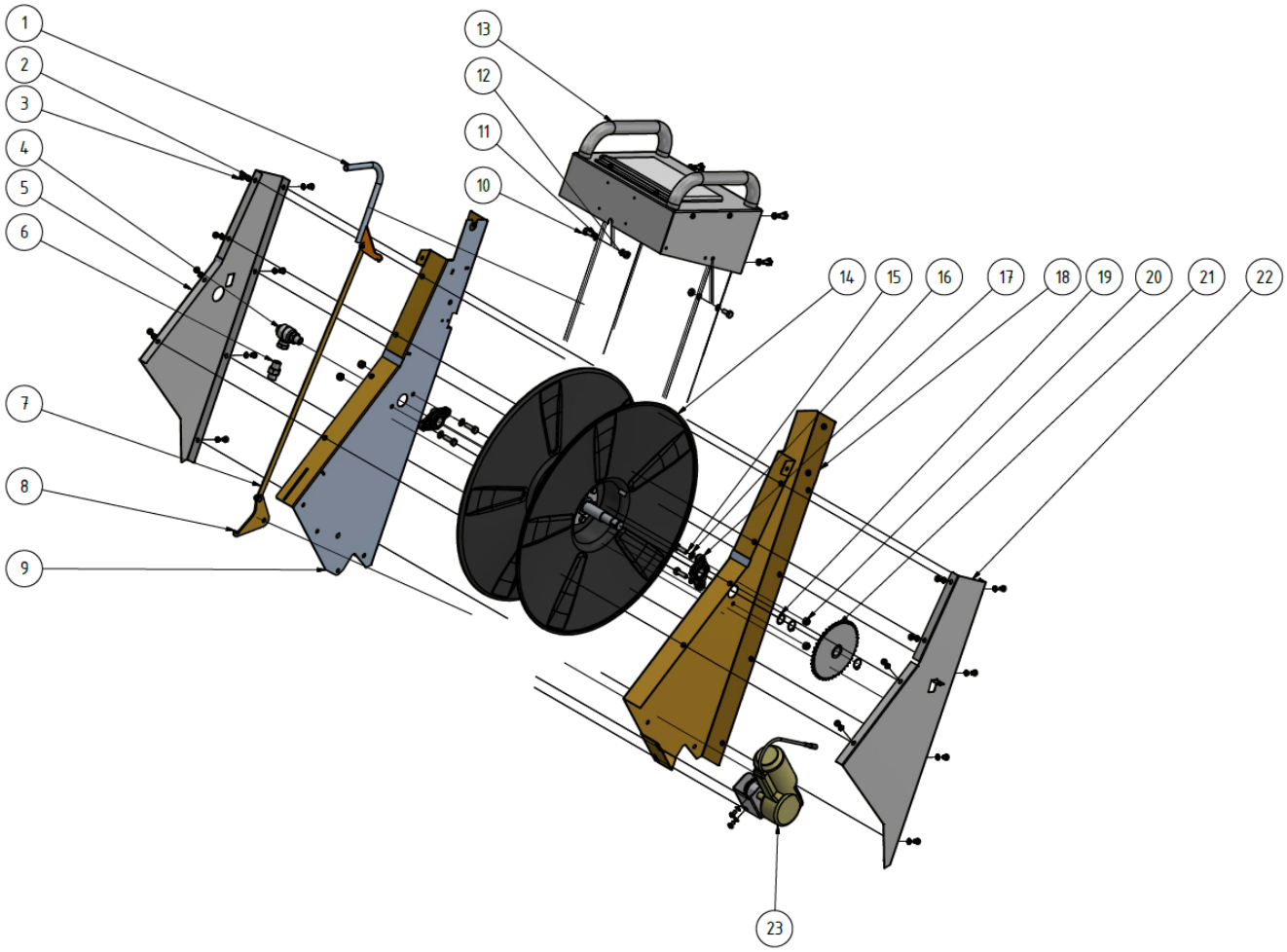

Items Number	Parts Number	Description	Quantity

From:
https://wiki.envirologic.se/ - **Envirologic Support Wiki**

Permanent link:
https://wiki.envirologic.se/doku.php/hose_reel_complete?rev=1572884929

Last update: **2019/11/04 08:28**