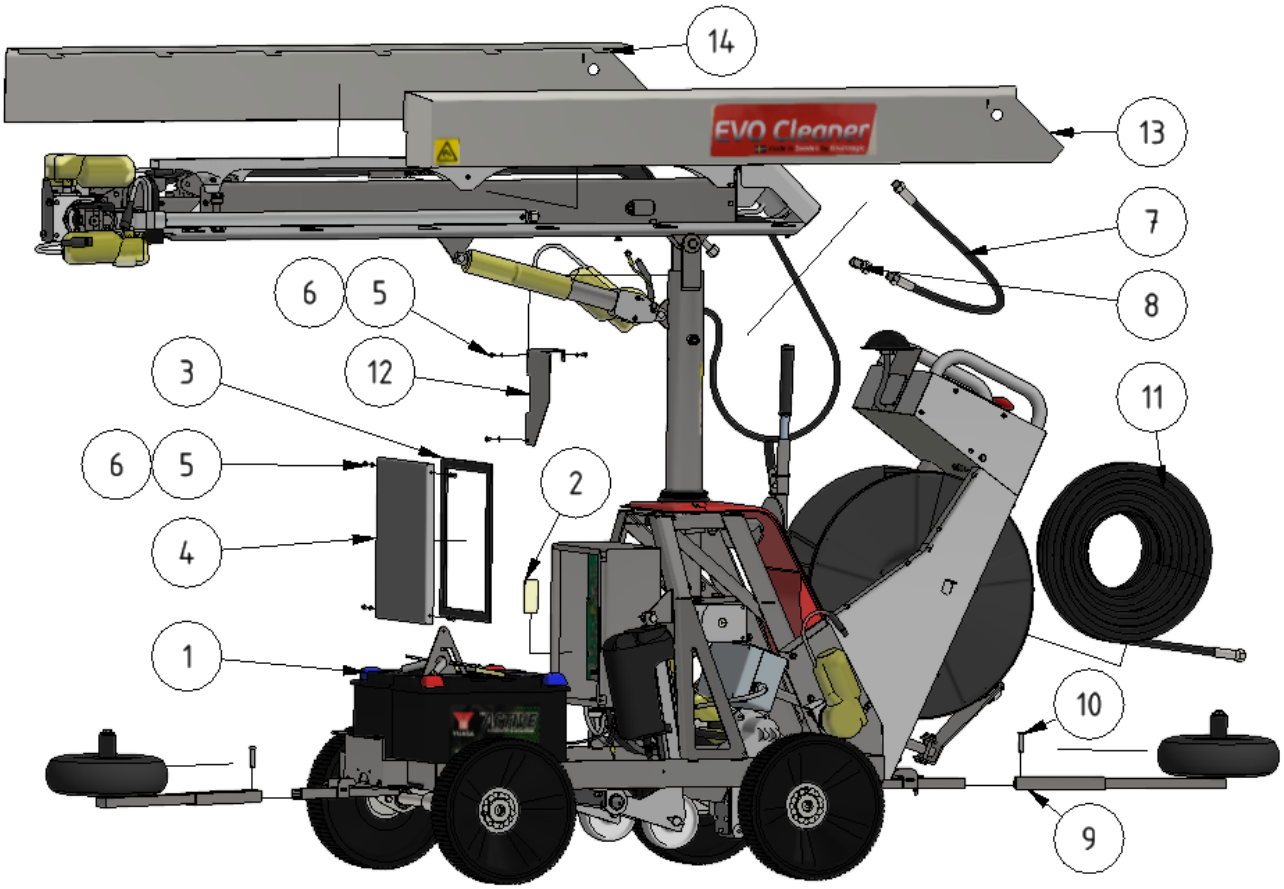

ITEM	DESCRIPTION	PART NUMBER	QTY
1	EVO Cleaner assembly 3	1109503	1
2	Cortec bar	901193	1
3	Sealing	101038_1	1
4	Lid	101038	1
5	Screw M5 x 8	941035	7
6	Washer M5 teeth	941087	7
7	Hose tower	969706RF	1
8	Adapter 12R-90°	964026RF	1
9	Side wheel assembly	1101113	2
10	Pin	904000	2
11	Hose 3/8 50m stainless	961017RF	1
12	Protection plate	109701	1
13	Left side, telescope	109705	1
14	Right side, telescope	109706	1

From:
https://wiki.envirologic.se/ - **Envirologic Support Wiki**

Permanent link:
https://wiki.envirologic.se/doku.php/service:spl:1109500?rev=1593785424

Last update: **2020/07/03 07:10**