EVO Cleaner assembly 2 - 1109502

Part of EVO Cleaner assembly 3 - 1109503

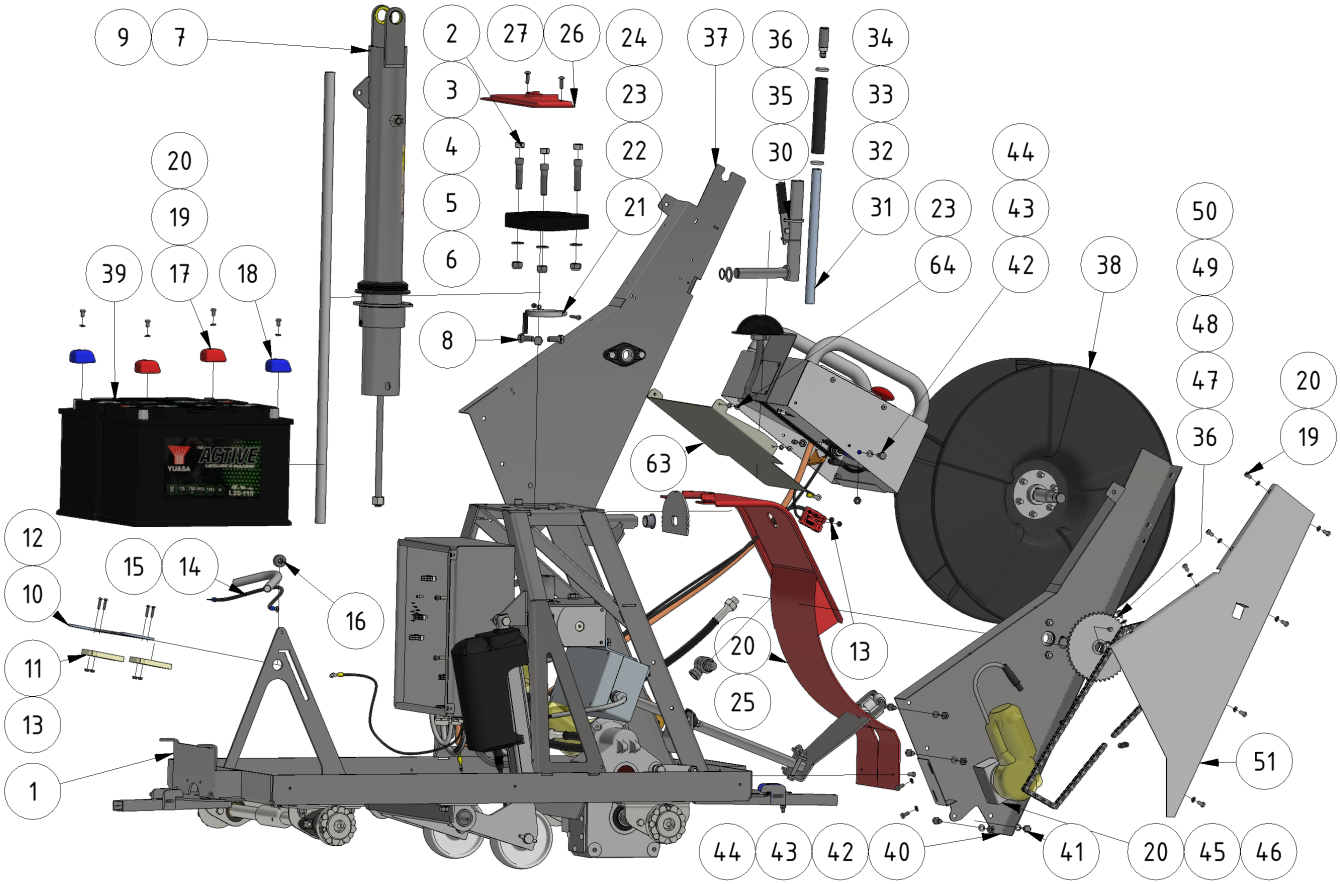

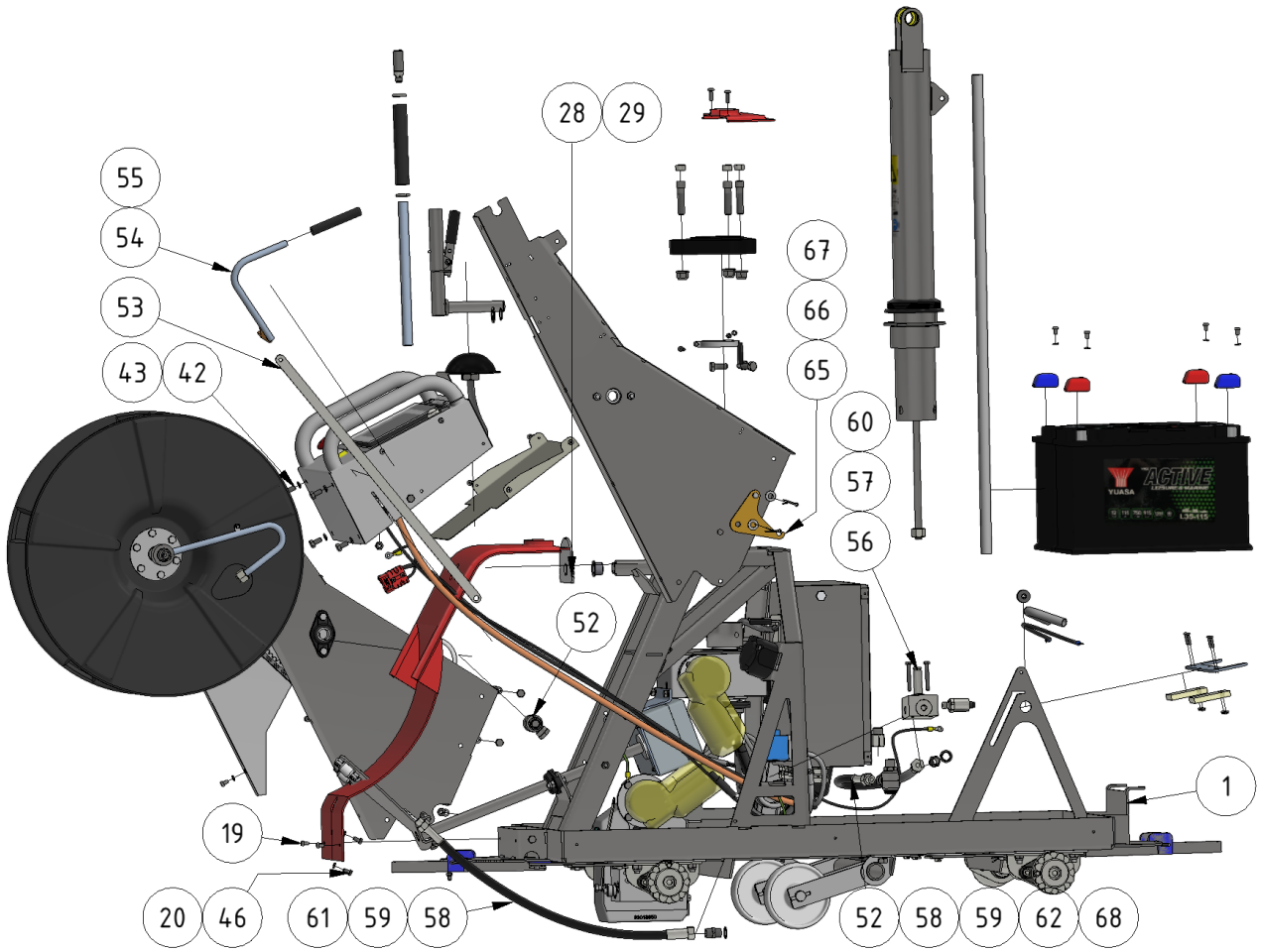

ITEM	DESCRIPTION	PART NUMBER	QTY
1	EVO Cleaner assembly 1	1109501	1
2	Bearing	1401024	1
3	Screw M12 x 50 mod	941027	3
4	Bearing 16/18×10	931203	3
5	Washer M12	941030	3
6	Nut M12, Nyloc	941071	3
7	Tower assembly	1109530	1
8	Screw M10 x 25	941106	3
9	Plastic pipe	1401008	1
10	Battery bar	409231	1
11	Battery-pusher	1409221	2
12	Screw M4 x 20	941078	6
13	Nut M4	941098	6
14	Battery cable	909231	1
15	Protection pipe	1409239	1
16	Cable entry, rubber	901102	1
17	Quick release battery connector (+)	909237	2
18	Quick release battery connector (-)	909238	2
19	Screw M6 x 10	941007	14

ITEM	DESCRIPTION	PART NUMBER	QTY
20	Spring washer M6	941045	14
21	Magnet clamp	1101116	1
22	Screw M5 x 40	941034	1
23	Washer M5 teeth	941087	5
24	Nut M5	941032	1
25	Rear cover	1409232	1
26	Top cover	1409215	1
27	Screw M6 x 20	941103	2
28	Segment	409230	1
29	Bearing	909203	1
30	Switch holder	1109519	1
31	Pipe 18 x 1	809212	1
32	Hose	949202	1
33	Switch	989205	1
34	Cable tie	949211	2
35	Washer	159212	1
36	Lock ring SgA20	941040	3
37	Right box assembly	1109526	1
38	Hose reel	1109513	1
39	AGM Battery	909244	2
40	Left box assembly	1109527	1
41	Screw M8 x 10	941080	2
42	M8 x 16	941101	12
43	Spring-washer M8	941088	14
44	Nut M8	941017	8
45	Hose reel drive unit	1109515	1
46	Screw M6 x 12	941008	2
47	Sprocket wheel z45	1109211	1
48	Key	901097	1
49	Chain 3/8 103 links	1109528	1
50	Chain-lock 3/8	901104	1
51	Left lid	1109213	1
52	Swivel with angle	961003V	2
53	Rod	159207	1
54	Clutch handle	1109206	1
55	Shrink tube	45519	1
56	Water valve	1101100F	1
57	Pressure sensor	989241	1
58	Adapter 12-3/8“ Stainless	961030RF	2
59	Tredo washer 3/8 stainless	961028RF	2
60	Screw M6 x 50	941012	2
61	Hose magv.	969027RF	1
62	Adapter	969006RF	1

ITEM	DESCRIPTION	PART NUMBER	QTY
63	Protection plate OP	109221	1
64	Screw M5 x 8	941035	4
65	Link	1109212	1
66	Washer M10	941022	2
67	Split-pin 3.2 x 25	941049	2
68	Hose magv.	969027RF	1

From:
https://wiki.envirologic.se/ - **Envirologic Support Wiki**

Permanent link:
https://wiki.envirologic.se/doku.php/service:spl:1109502?rev=1736161763

Last update: **2025/01/06 03:09**