Drive unit

Part of EVO Cleaner assembly 2 - 1109502

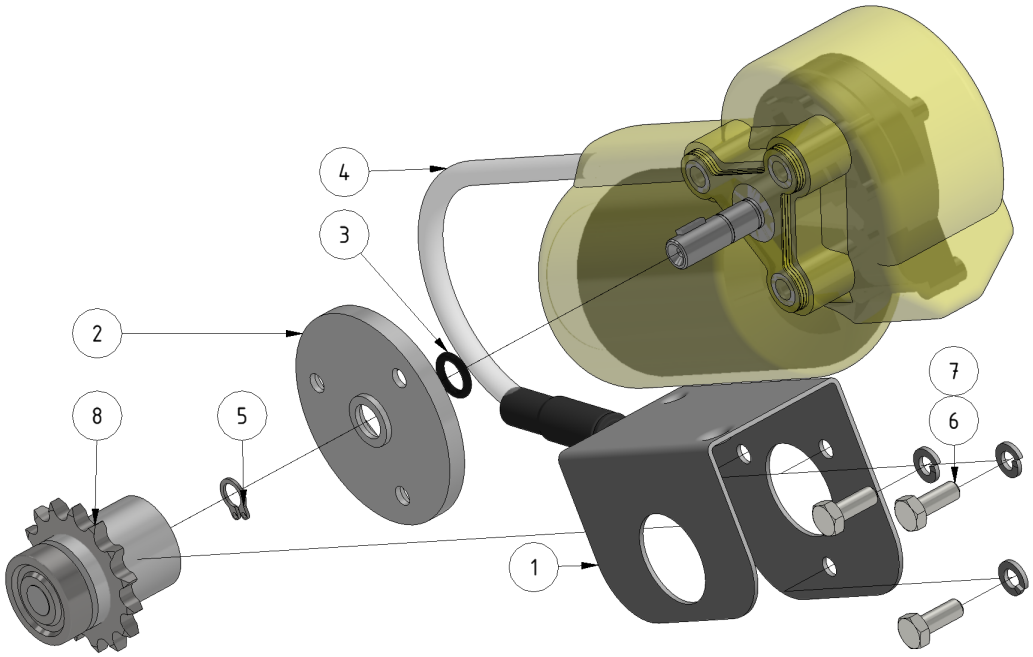

ITEM	DESCRIPTION	PART NUMBER	QTY
1	Joint motor	159204	1
2	Motor sealer	909701	1
3	O-ring 10 x 3,5	969001	1
4	Motor 220 rpm, gen.2	909241	1
5	Lock ring SGA 10	941041	1
6	Screw M6 x 16	941006	3
7	Spring Washer M6	941045	3
8	Sprocket 15t	1101124	1

From:
https://wiki.envirologic.se/ - **Envirologic Support Wiki**

Permanent link:
https://wiki.envirologic.se/doku.php/service:spl:1109515-1?rev=1601210340

Last update: **2020/09/27 05:39**