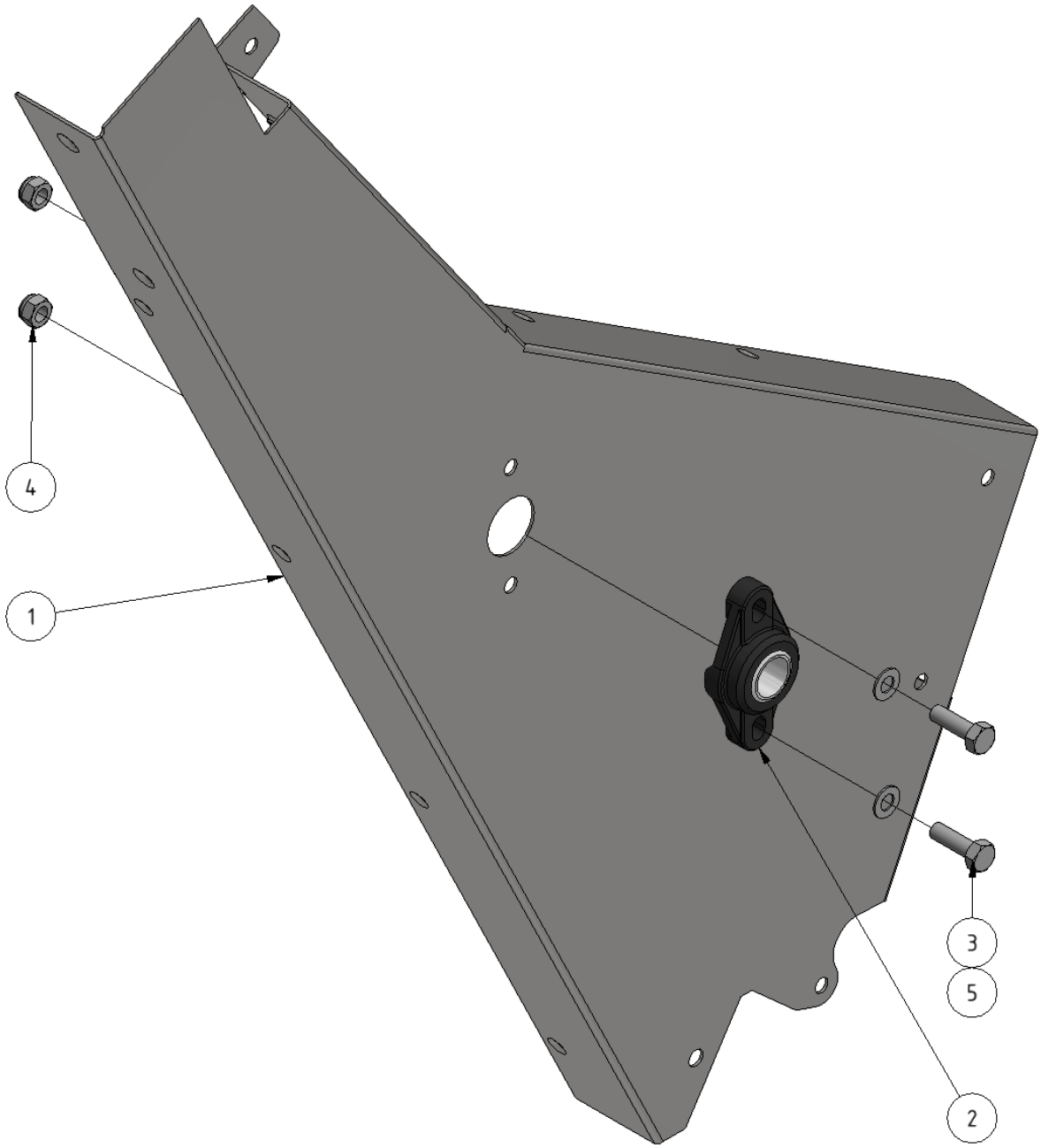

ITEM	DESCRIPTION	PART NUMBER	QTY
1	Left box		1
2	Flange-bearing EFOM 20	901036	1
3	Screw M8 x 25	941018	2
4	Nut M8 Nyloc	941020	2
5	Washer M8	941016	2

From:
https://wiki.envirologic.se/ - **Envirologic Support Wiki**

Permanent link:
https://wiki.envirologic.se/doku.php/service:spl:1109527-1?rev=1594271898

Last update: **2020/07/08 22:18**