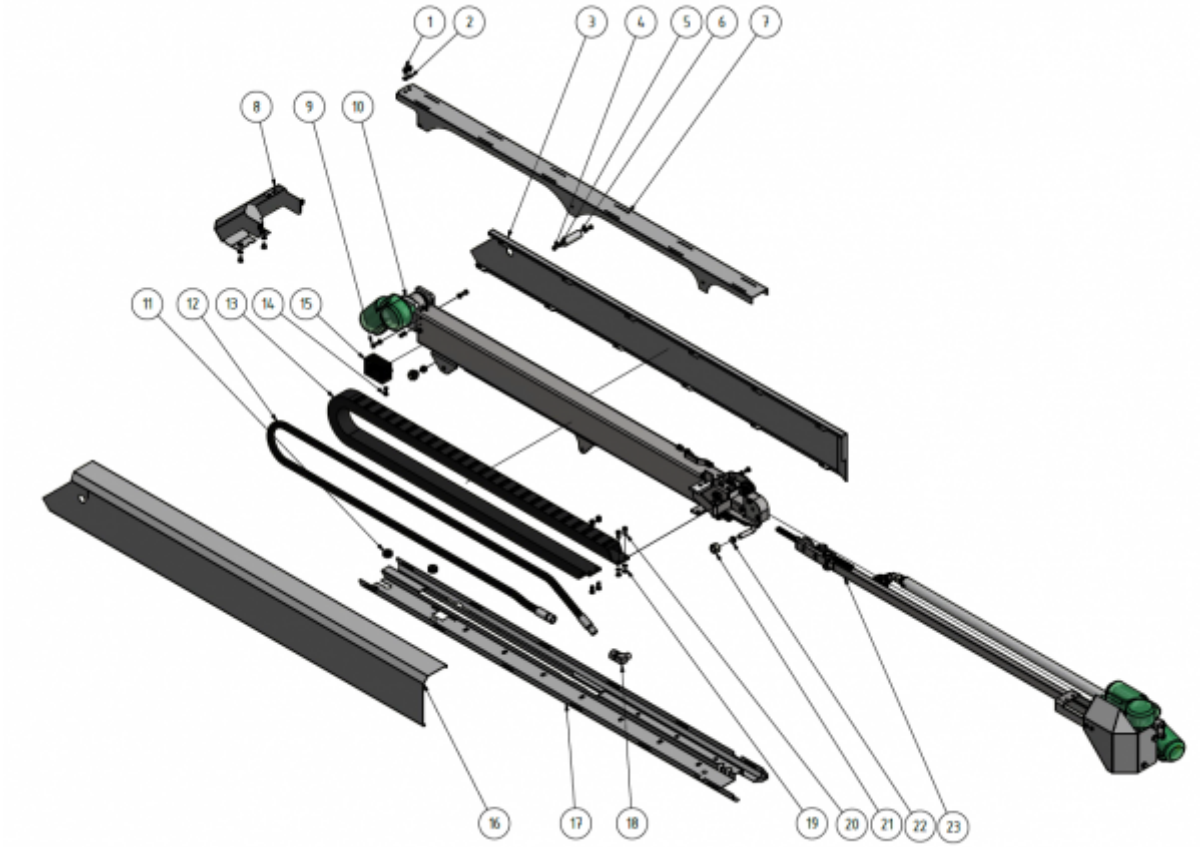

Item Number	Parts Number	Description	Quantity
1			

From:
https://wiki.envirologic.se/ - **Envirologic Support Wiki**

Permanent link:
https://wiki.envirologic.se/doku.php/telescope?rev=1572870068

Last update: **2019/11/04 04:21**